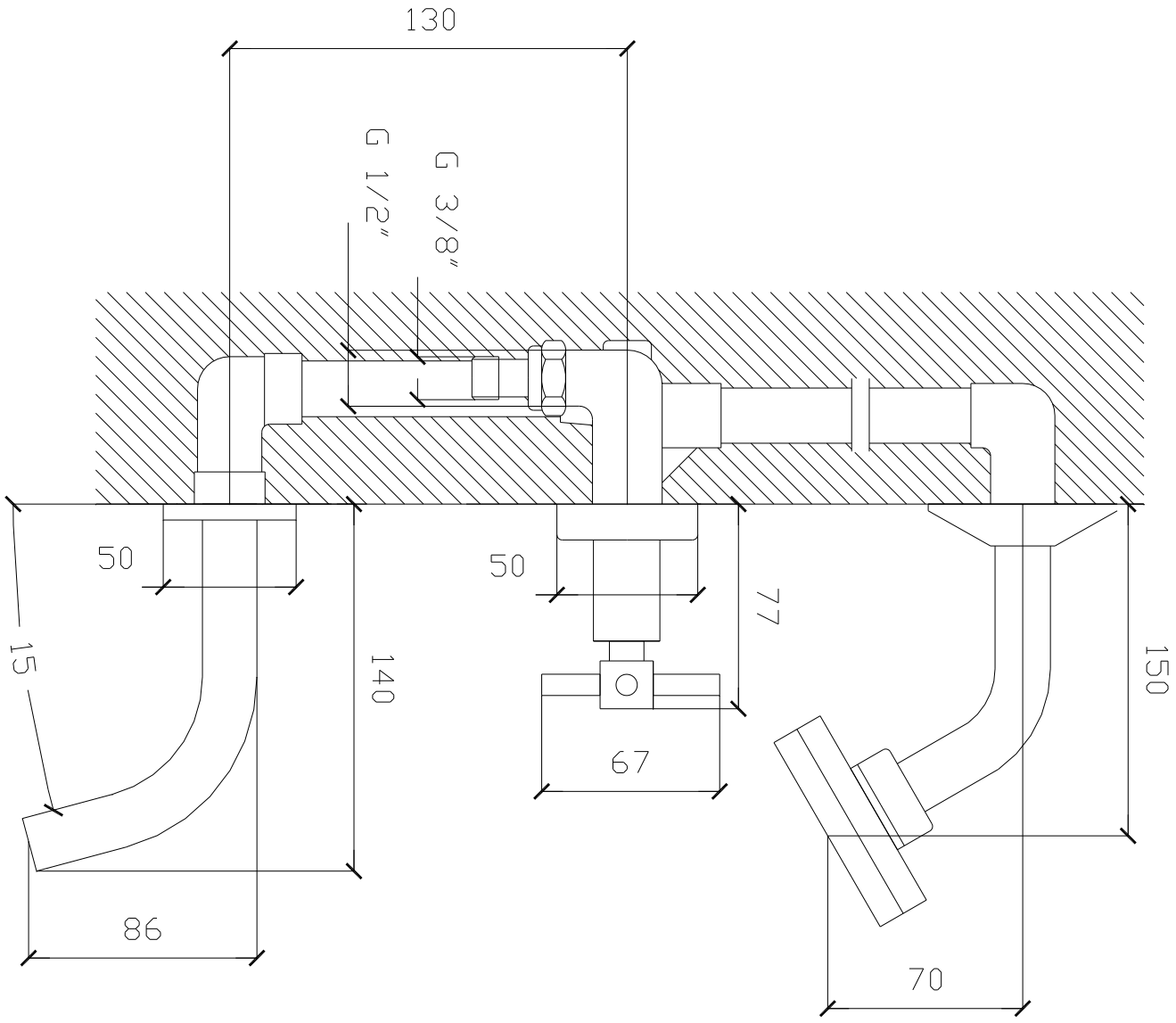
130
G 1/2"
G 3/8"
50
50
77
150
15
140
67
86
70

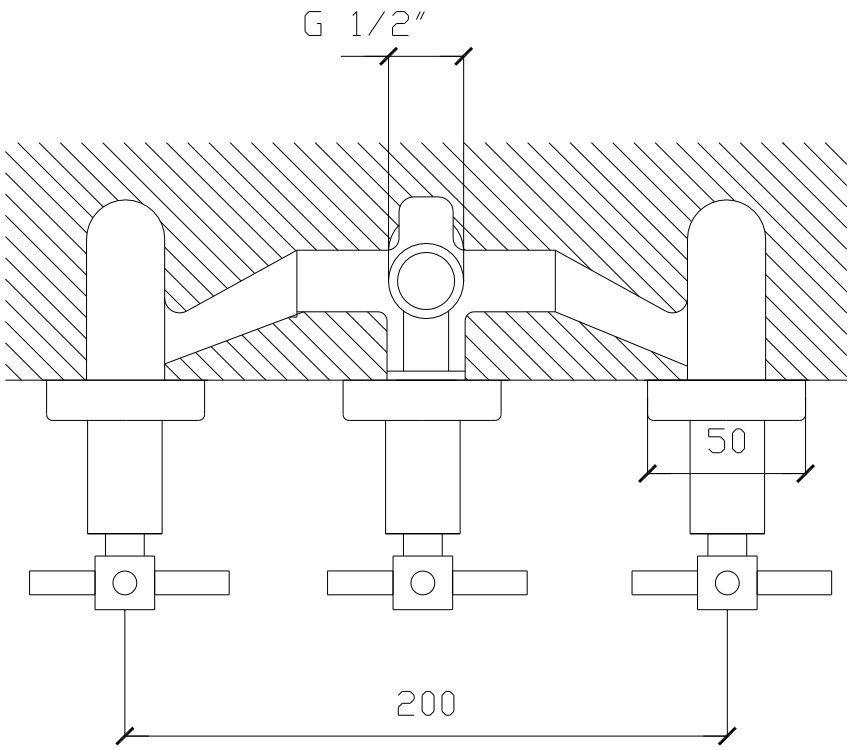
G 1/2"
50
200